REVISION HISTORY					
REV#	BY	CHK	ECO#	EFF. DATE	DESCRIPTION

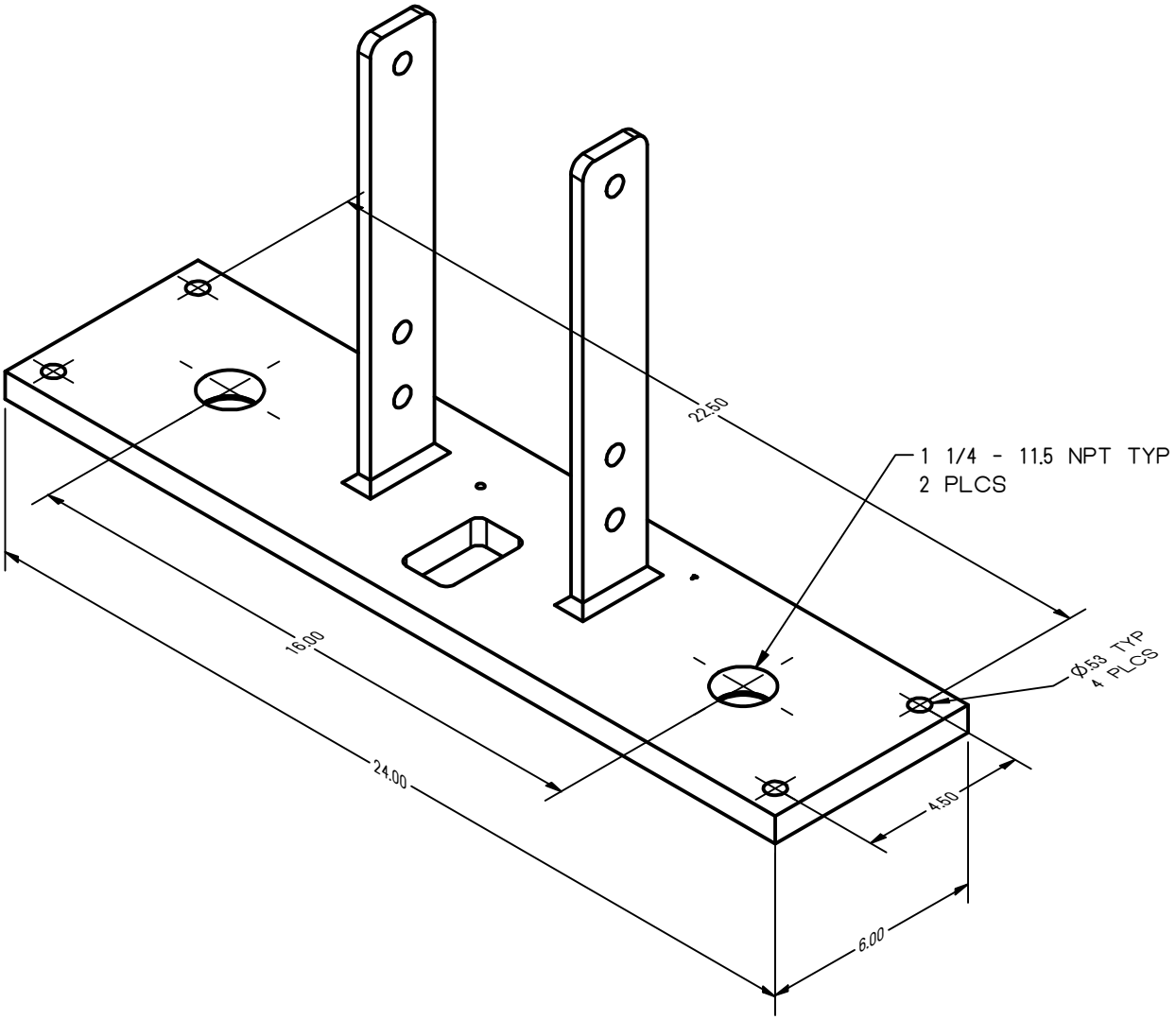

UNCONTROLLED. NOTICE OF PROPRIETY: THIS DOCUMENT CONTAINS CONFIDENTIAL AND PROPRIETARY INFORMATION OF A SENSITIVE NATURE. THE DRAWING AND ASSOCIATED INFORMATION SHALL NOT BE DISCLOSED, IN WHOLE OR IN PART, OR BE USED TO MANUFACTURE FOR USE OR SALE BY ANY PARTY WITHOUT EXPLICIT PRIOR WRITTEN CONSENT OF HAWKEYE INDUSTRIES INC. **UNPUBLISHED-CONFIDENTIAL-ALL RIGHTS RESERVED © HAWKEYE INDUSTRIES INC.**

DESCRIPTION
MODEL 150 BASE PLATE

PART NUMBER 166.200.010 *DOC SUFFIX* - 10
DRAWING NUMBER

DRAWING TYPE
CONFIG DRAWING

HAWKEYE INDUSTRIES INC.
PROUDLY CANADIAN

S:\Engineering\Products\15100 Tankage - Level Indication\15166 Open Tank System\166.200.010-10.idw