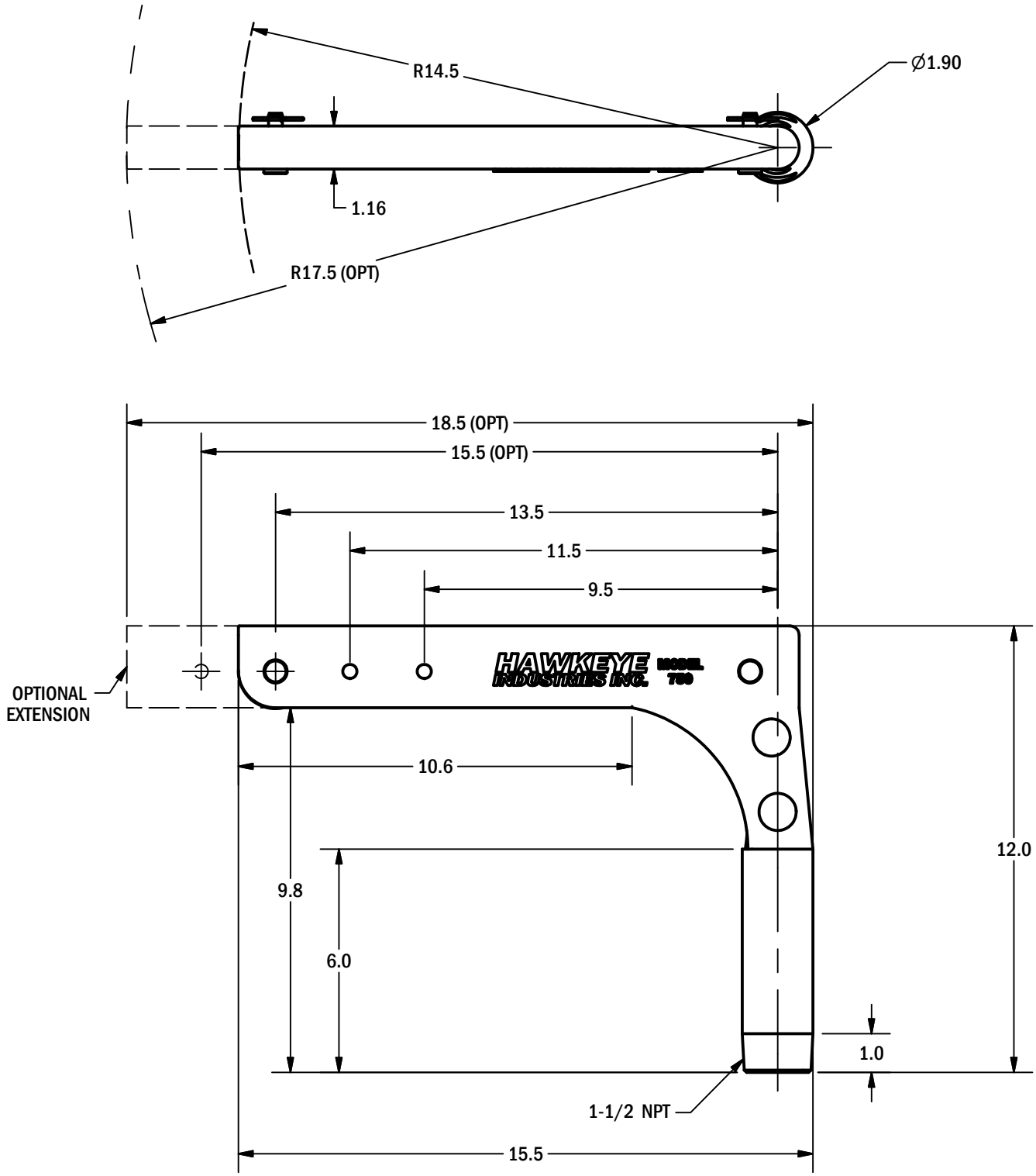

APPROX. 3 lb

HAWKEYE INDUSTRIES INC.
EDMONTON, ALBERTA, CANADA

DRAWING TITLE
Model 750 General Dimensions

DRAWING #
SH2-750-GD

\\hawkeye-dc\SharedFiles\Engineering\Manufactured Products\Model 750-HOS\Drawings\SH2-750-GD.idw